# 45 STN mounting bracket instructions

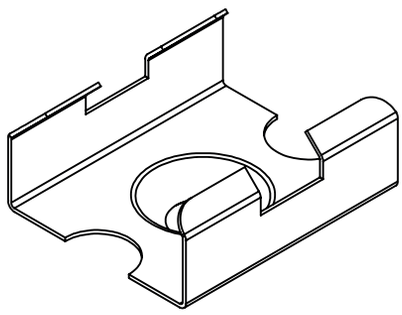

**1.** Attach the mounting bracket to the surface with screws.

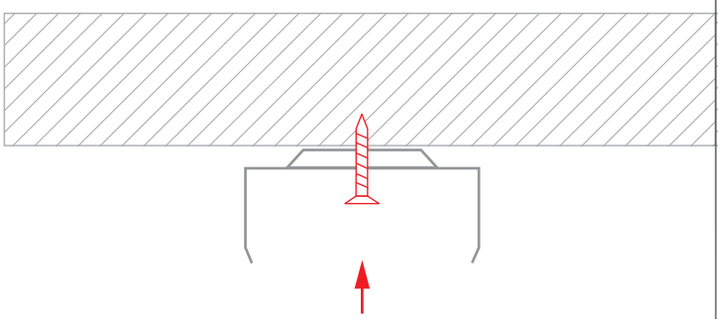

**2.** Bend back one side of the mounting bracket and insert the extrusion.

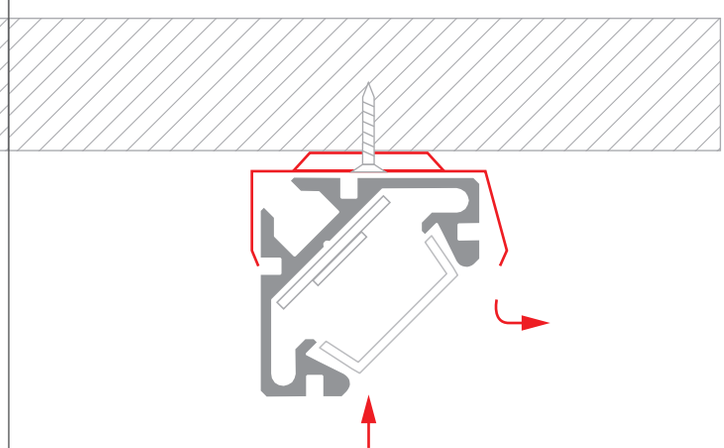

**NOTE!** A list of products corresponding with the selected accessories is available at klusdesign.com.